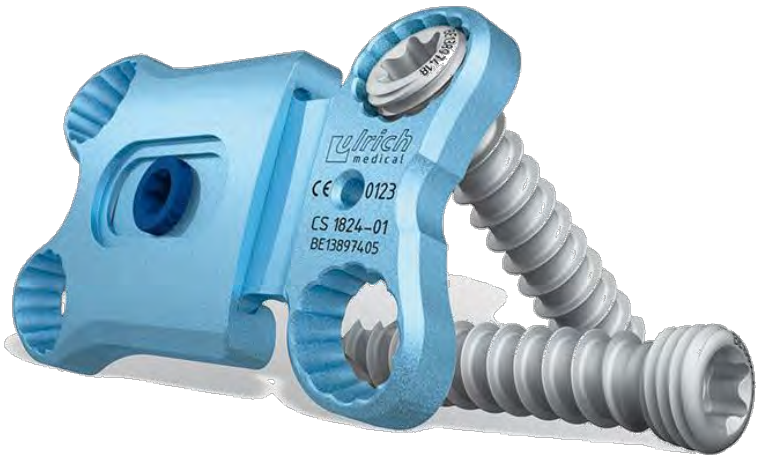

mambo
modular cervical plate system

ulrich medical

mambo
modular cervical plate system

- Overview of system & implant components
- Philosophy of dynamic instrumentation
- Indications & Surgical technique
- Tray design

mambo Components

Plates

XXS

S

M

L

1-seg	20 - 22 mm	24 – 26 mm	26 – 30 mm	30 – 35 mm
2-seg	--	40 – 45 mm	45 – 53 mm	53 – 62 mm
3-seg	--	56 – 63 mm	63 – 75 mm	75 – 89 mm
4-seg	--	72 – 82 mm	82 – 98 mm	98 – 115 mm
5-seg	--	88 – 100 mm	100 – 120 mm	120 – 142 mm
6-seg	--	103 – 118 mm	118 – 141 mm	141 – 168 mm

All plates have the same width of 18 mm.

mambo Components

Cranial & Caudal Plates

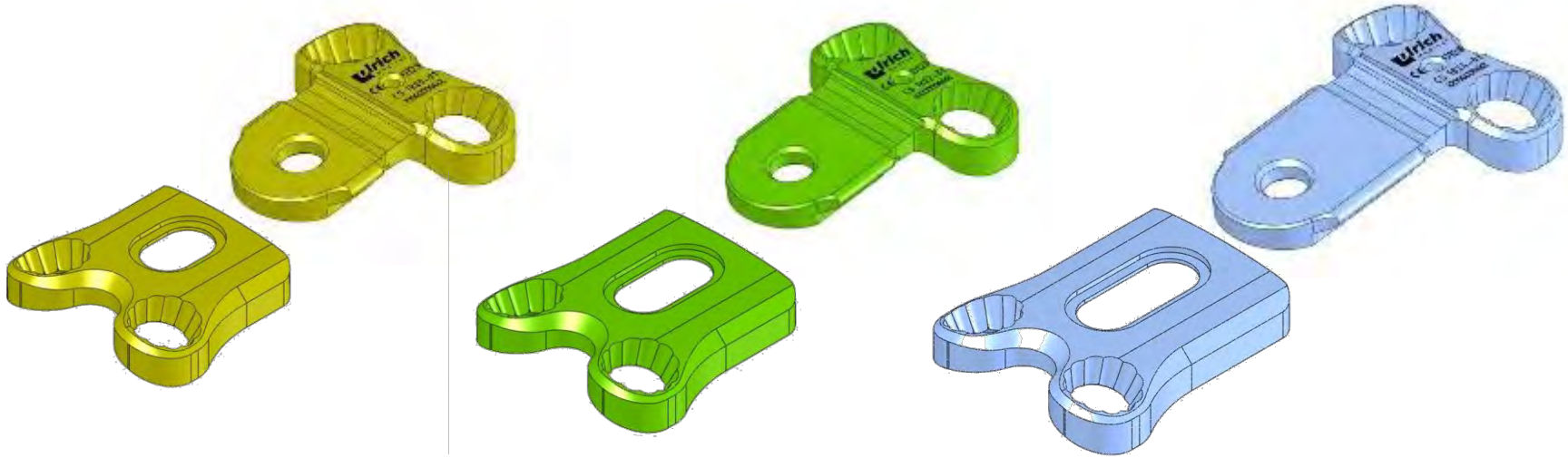

S M L

mambo Components

Extension Plates

S

M

L

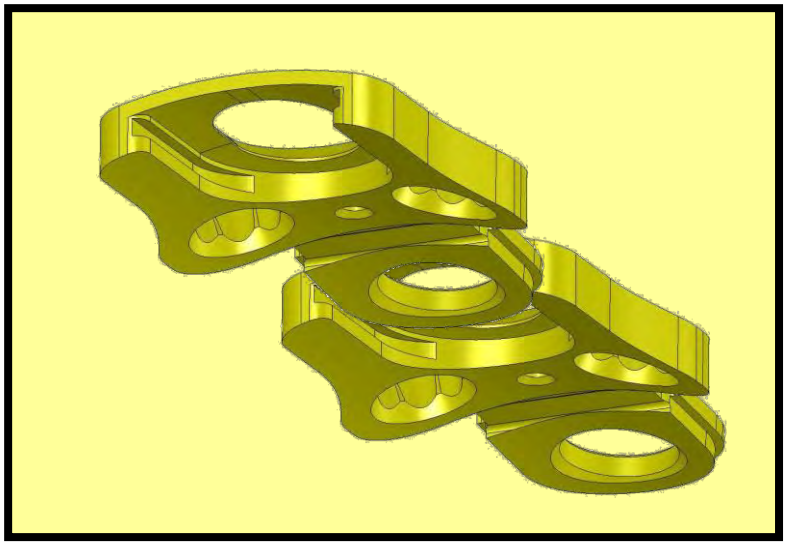

The modular systems offers the option of individual plate lengths.

mambo Komponenten

Platten

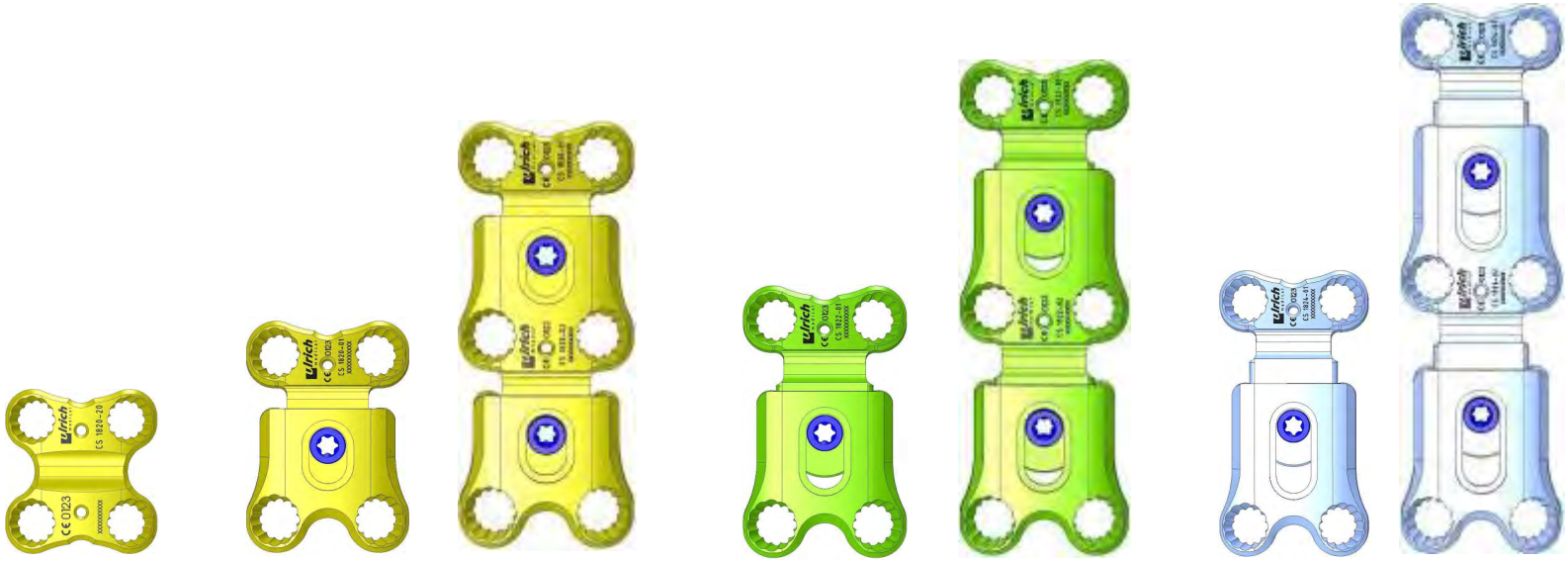

XXS S M L

- Pre-fixed mono- and bisegmental Plates (incl. settlingscrew)
- Pre-contoured Plates (8° per Segment)

mambo Components

Plates - Product Numbers

mambo single plate XXS yellow	CS 1820-20
mambo cranial plate S yellow	CS 1820-01
mambo extension plate S yellow	CS 1820-02
mambo caudal plate S yellow	CS 1820-03
mambo cranial plate M green	CS 1822-01
mambo extension plate M green	CS 1822-02
mambo caudal plate M green	CS 1822-03
mambo cranial plate L blue	CS 1824-01
mambo extension plate L blue	CS 1824-02
mambo caudal plate L blue	CS 1824-03

mambo Components

Settling Screw

CS 1826-01

DYNAMIC INSTRUMENTATION

Clamping Screw

CS 1826-02

RIGID INSTRUMENTATION

mambo Components

Bone Screw

CS 1830-XX (i.e. CS 1830-13 for 13 mm)

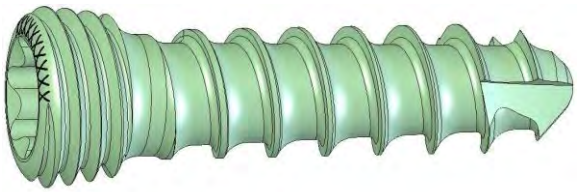

- Lengths 13, 15, 17, 19 mm
- Diameter 3,5 mm
- Conic Core Diameter
- HA 4 Thread (upgrade 1,5 mm)
- Screw head with 3 nuts

Rescue Screw

CS 1832-XX (i.e. CS 1832-13 for 13 mm)

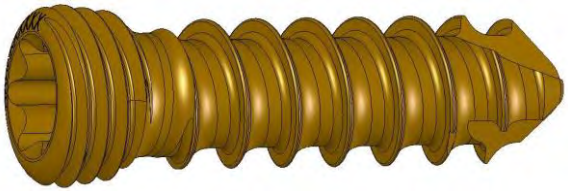

- Lengths 13, 15, 17, 19 mm
- Diameter 4,0 mm
- Cylindric Core Diameter
- HA 4 Thread (upgrade 1,5 mm)
- Screw head with 3 nuts

mambo Backout protection

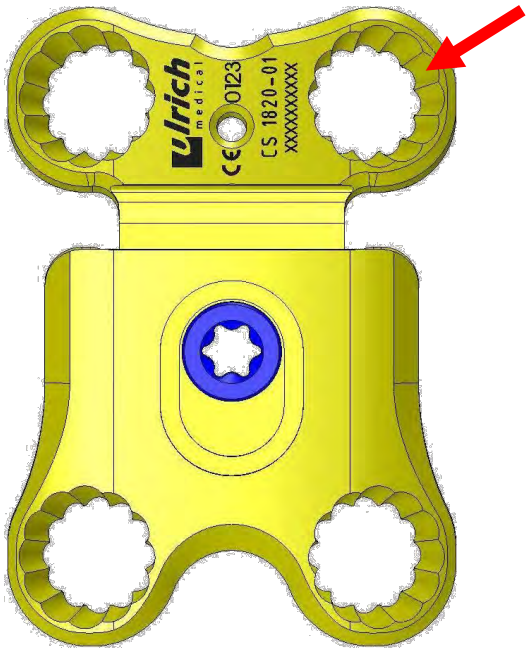

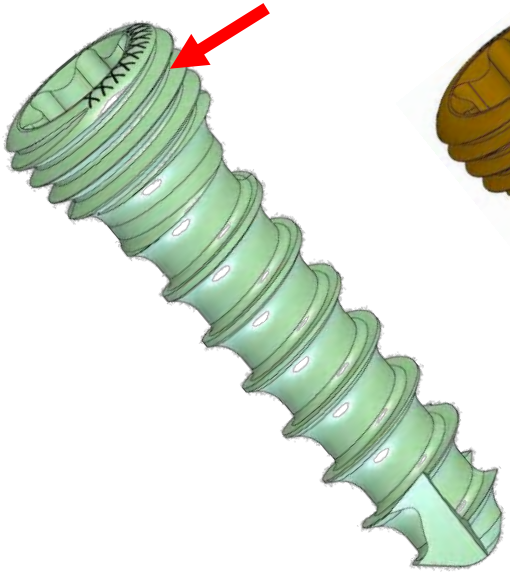

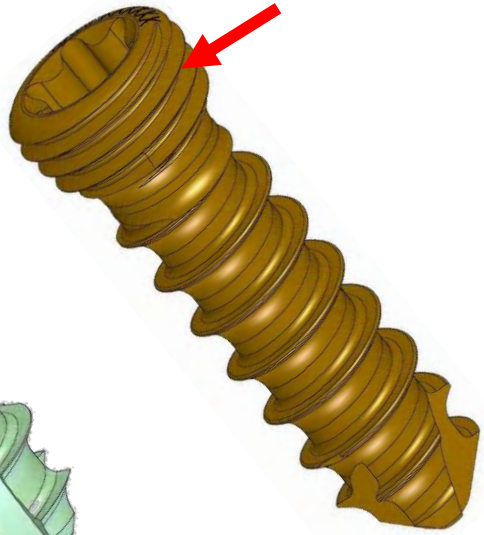

Screw head with 3 nuts locks into plate with asterisk screw hole → press-fit

Philosophy: Dynamic and constrained instrumentation

rigid / constrained instrumentation	dynamic
fixed screw angle, fixed screw head, one fixed plate	Various screw angulations, plate consisting of plate components which can slide => axial settling possible

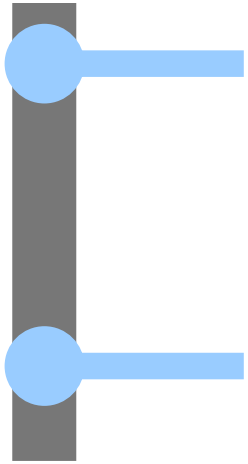

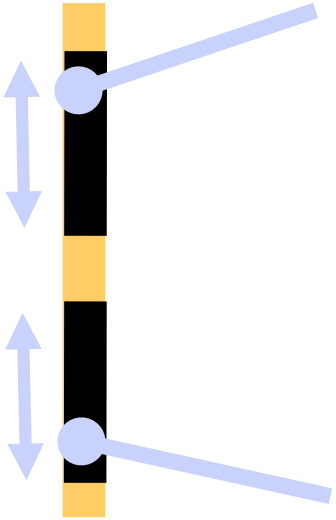

Philosophy: Dynamic and constrained instrumentation

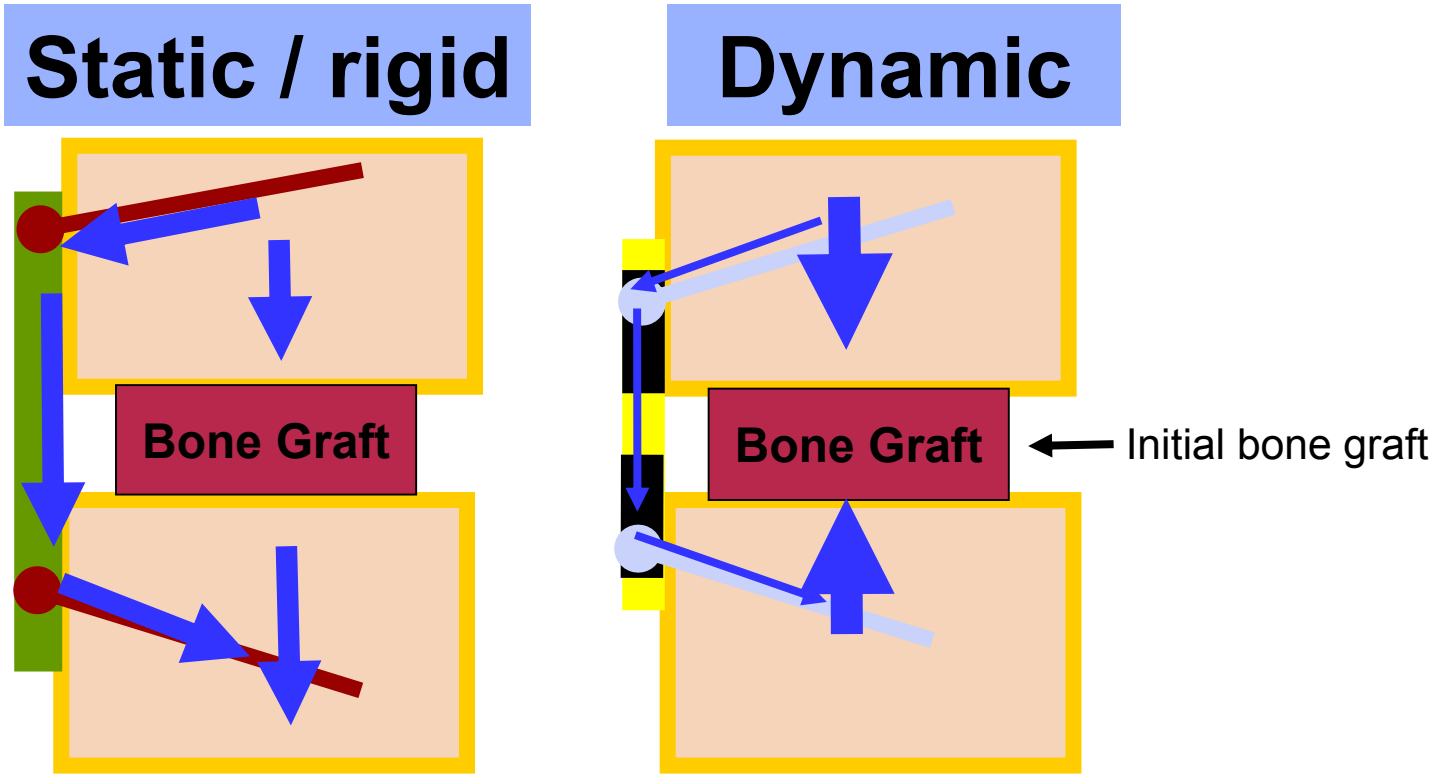

Initial load transfer through implant construct and through anterior column / graft right after graft insertion.

Philosophy: Dynamic and constrained instrumentation

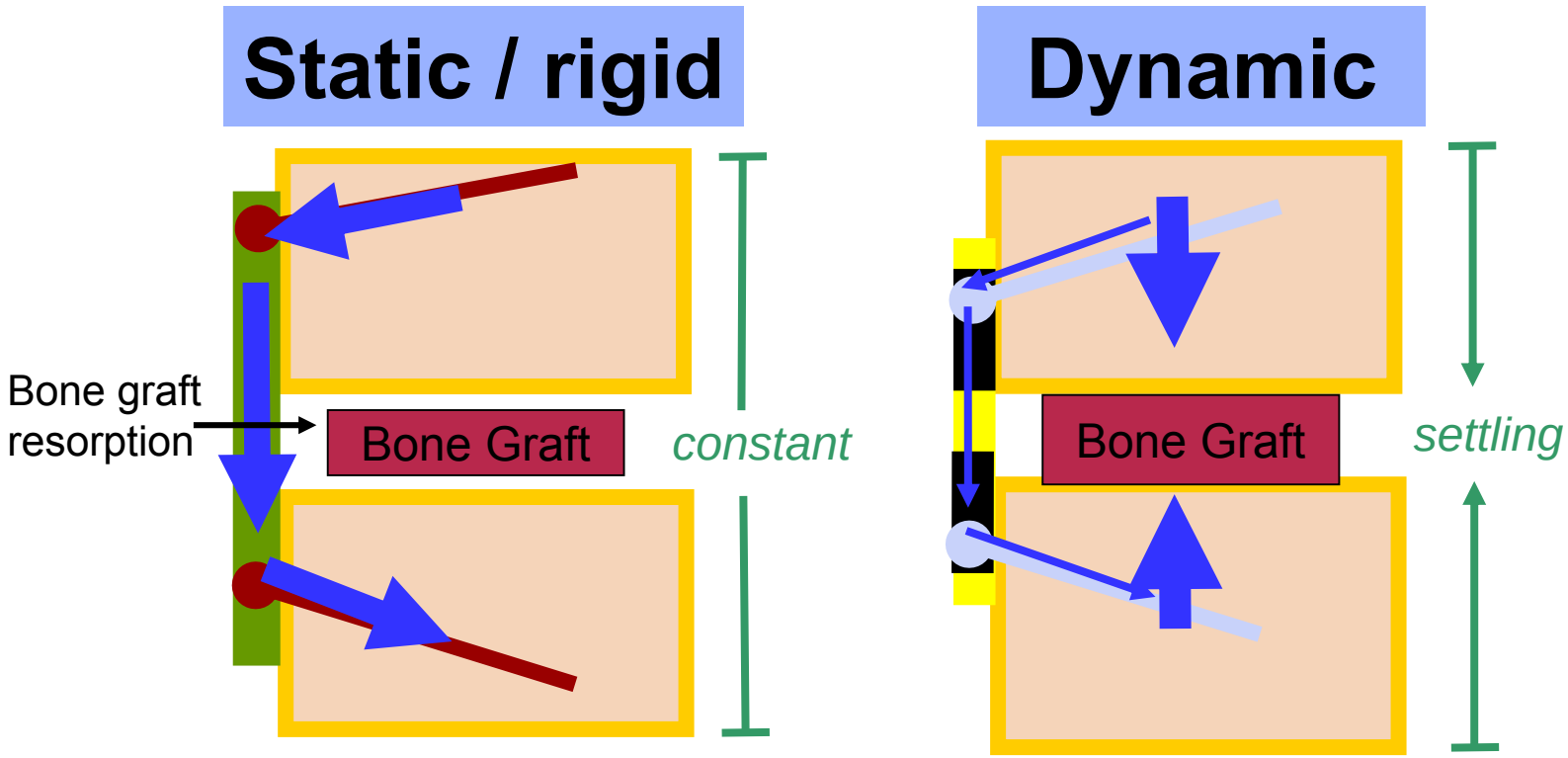

Load sharing after graft „Settling“ / resorption.

Dynamic Biomechanical Concept

= load transfer through the bone graft, not the implant

→ less implant failure

= load sharing

→ earlier and more effectual fusion

= reduced bone graft resorption

= reduced loss of correction

Julius Wolff, 1836 - 1902

The controls exerted by mechanical forces, recognized for over a century, have been formulated as **Wolff's law**:

"Every change in the function of a bone is followed by certain definite changes in its internal architecture and its external conformation."

Indications

Instabilities

resulting from various causes such as conditions

- after anterior removal of the intervertebral discs
- fractures
- tumours
- pseudarthrosis resulting from previous unsuccessful operations of the cervical spine
- degenerative disease

mambo Surgical Technique

Applying of the reposition tool

The guiding sleeves CS 1851-02/-03 (one with plate stop) are positioned on the middle of the vertebral body.

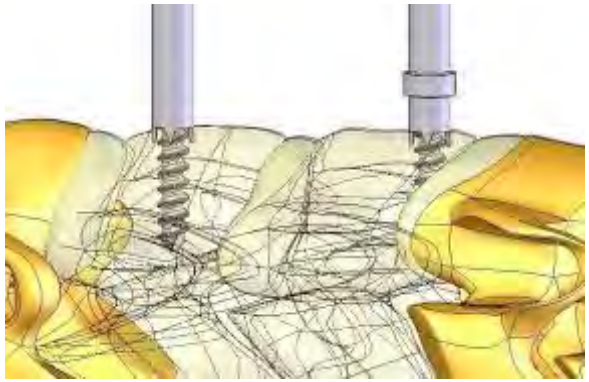

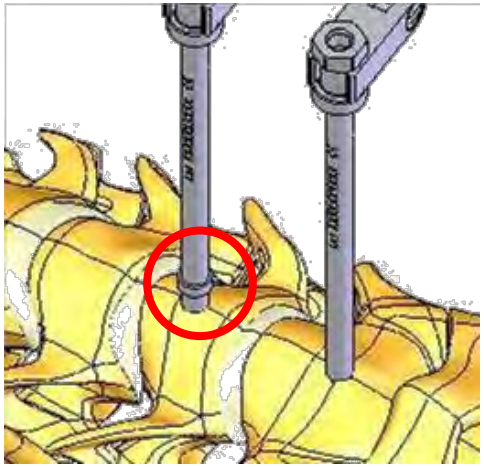

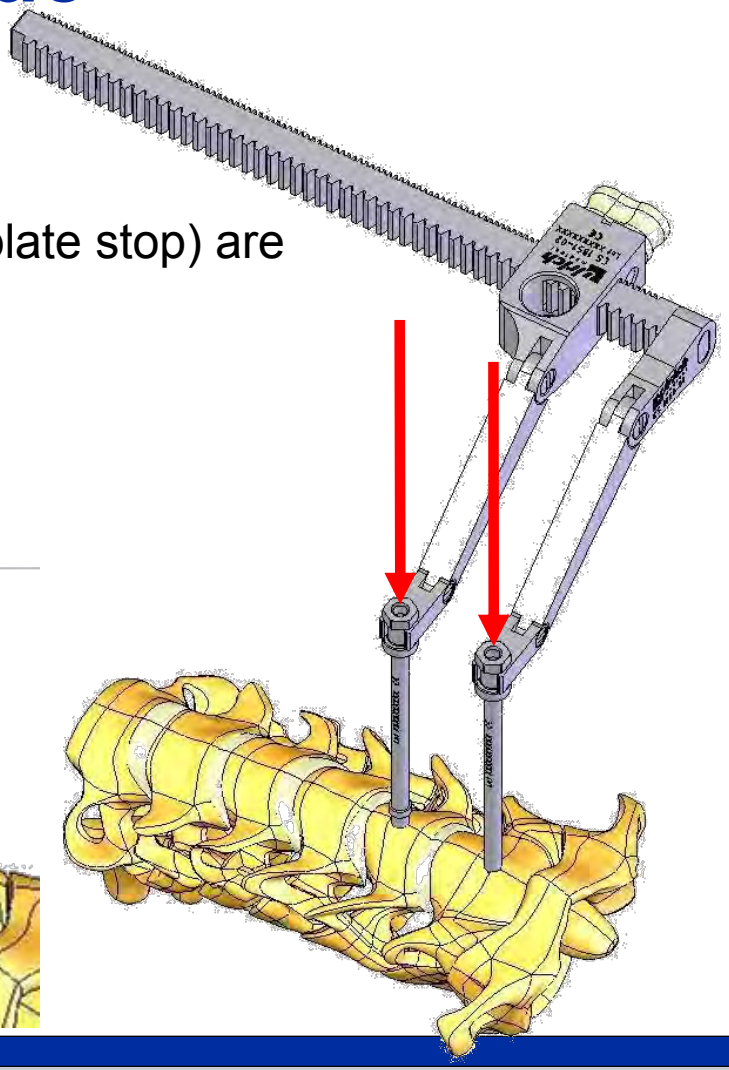

mambo Surgical Technique

Open the cortical bone

Using the awl CS 1860-01
(penetration depth 4 mm).

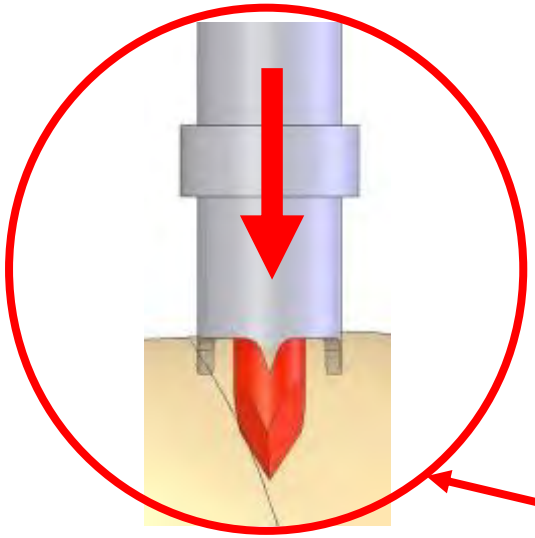

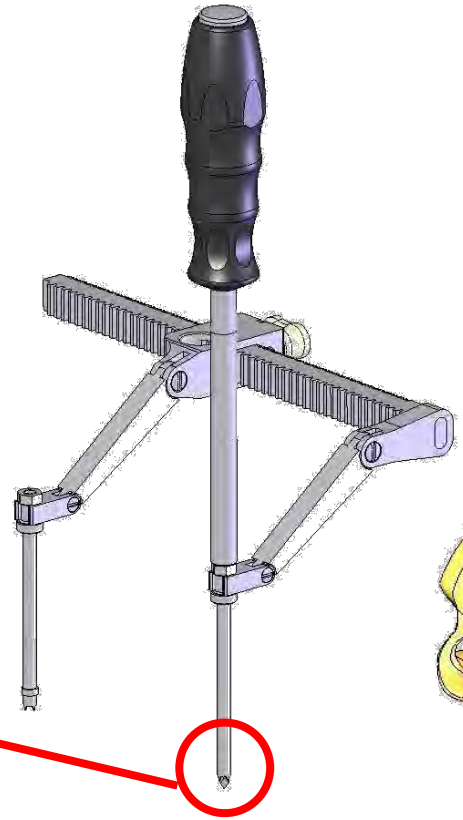

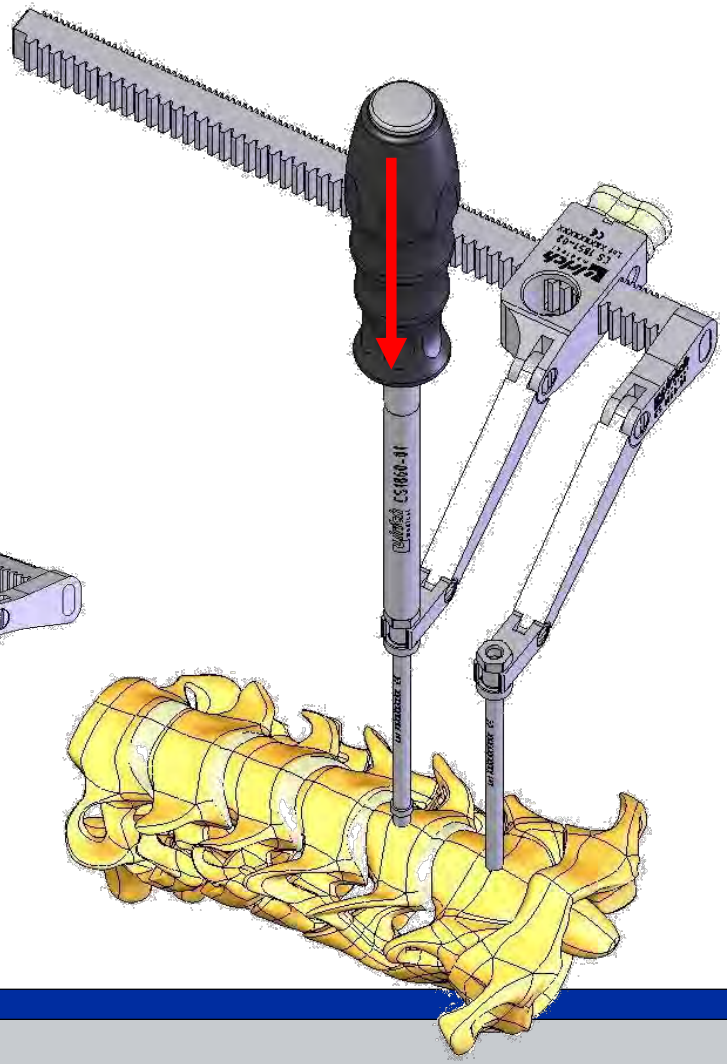

mambo Surgical Technique

Placing the reposition pins

After the opening of the cortical bone by the awl the reposition pins CS 1851-05/-06/-07 (available in 3 lengths: 14, 16, 18 mm) are inserted into the guiding sleeves of the reposition tool using the screwdriver torx 15 CS 1864.

Reposition Pin

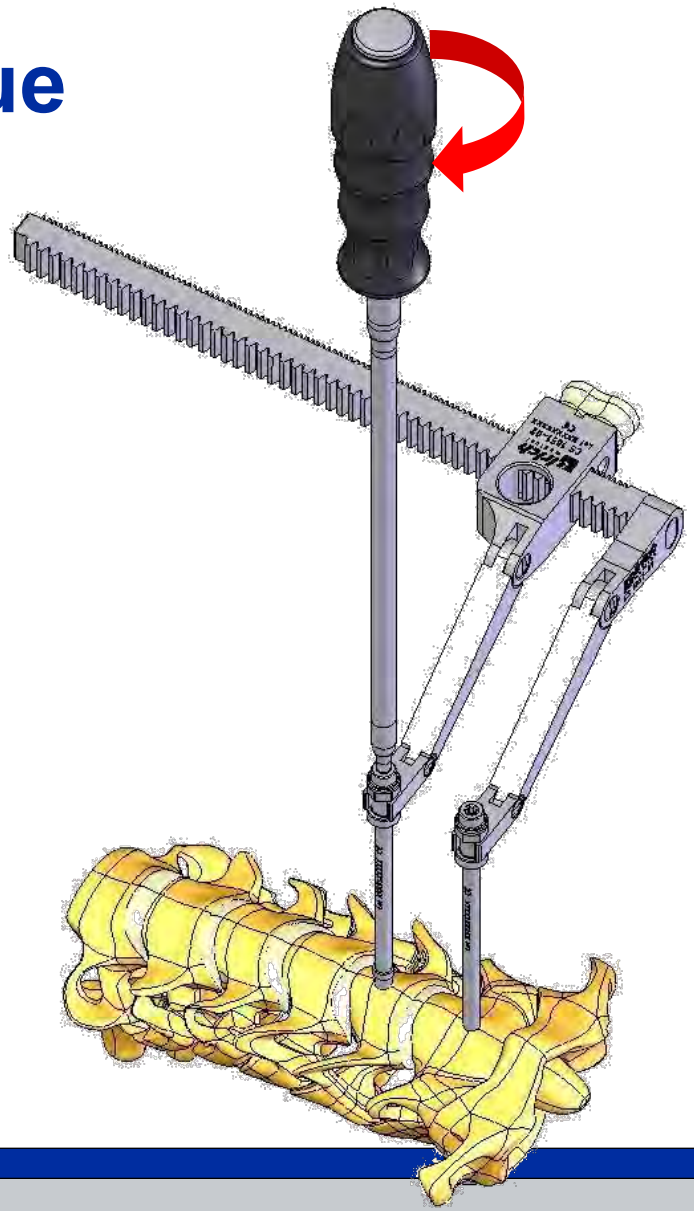

mambo Surgical Technique

Distraction

Distraction of intervertebral space for removing and implantation of bone graft or cage using the adjuster (CS 1852).

Turning the knob to fix distraction.

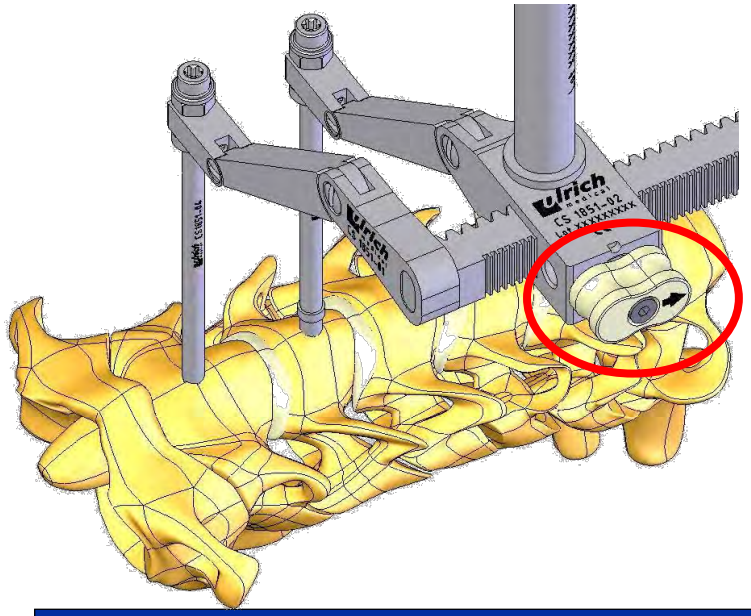

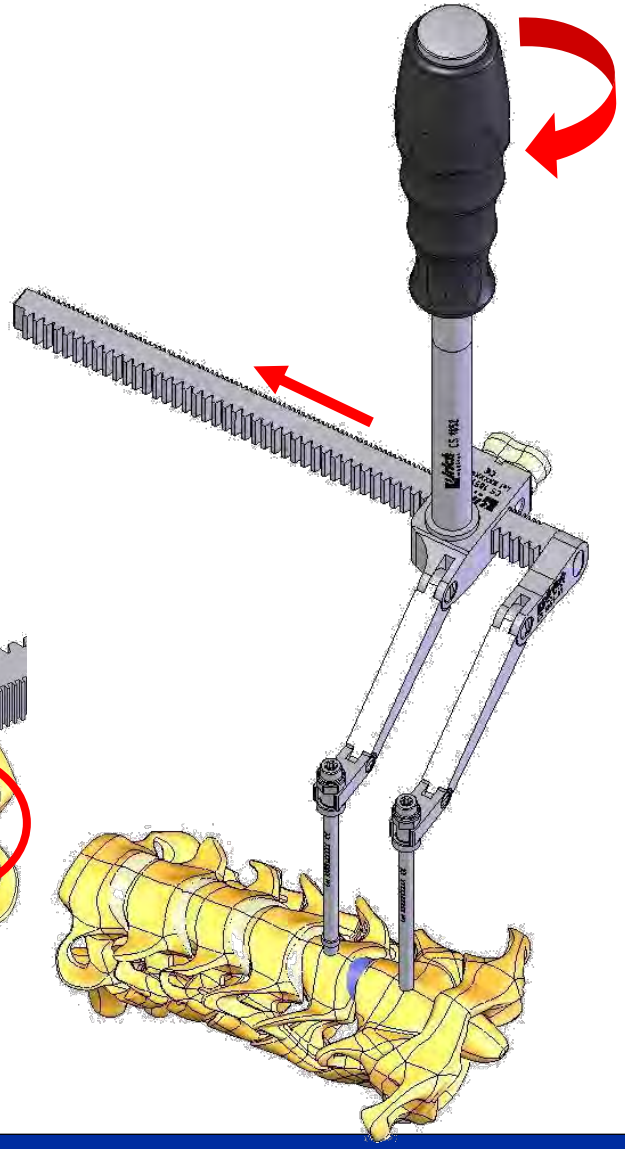

mambo Surgical Technique

Measuring plate length

Determination of the appropriate plate length using the measuring gauge CS 1854.

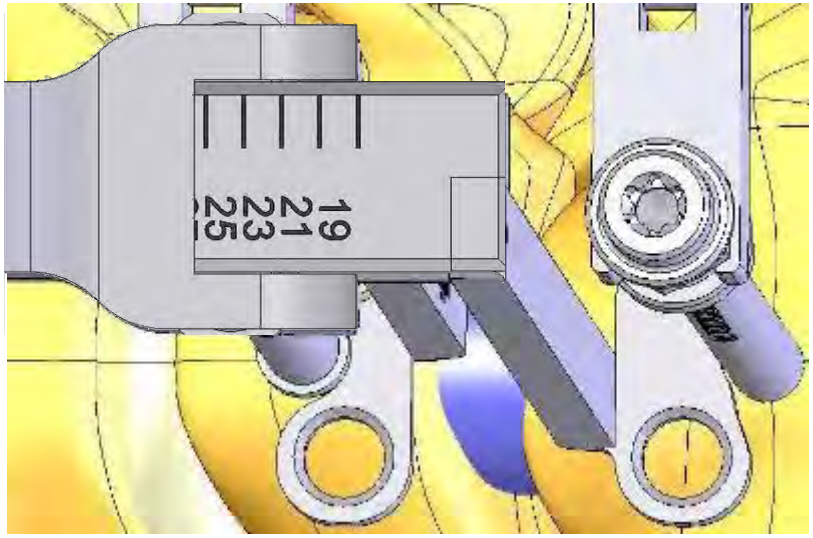

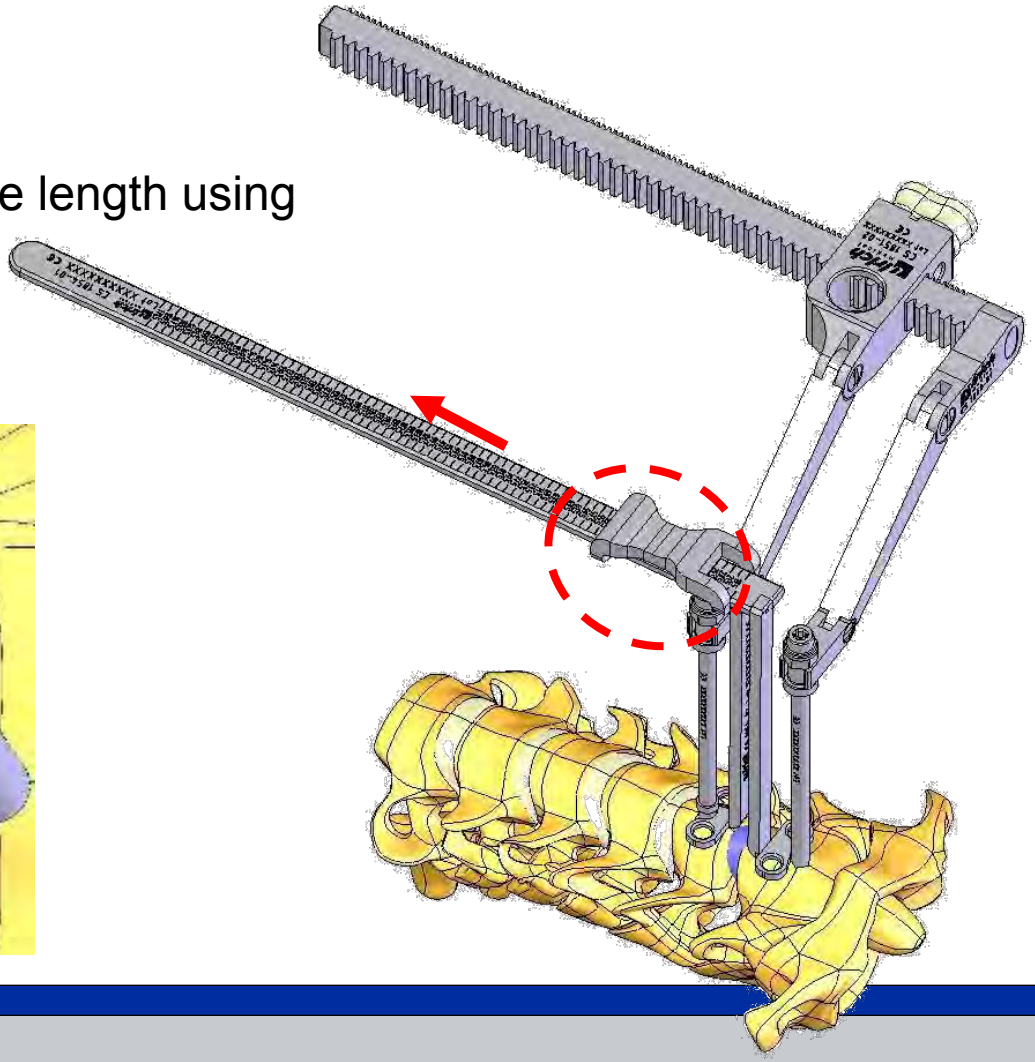

mambo Surgical Technique

Inserting of the plate

Inserting the plate by using the plate holder CS 1856.

Alignment of the caudal plate with notch to the guiding sleeve with plate stop (to press the plate on the vertebral body).

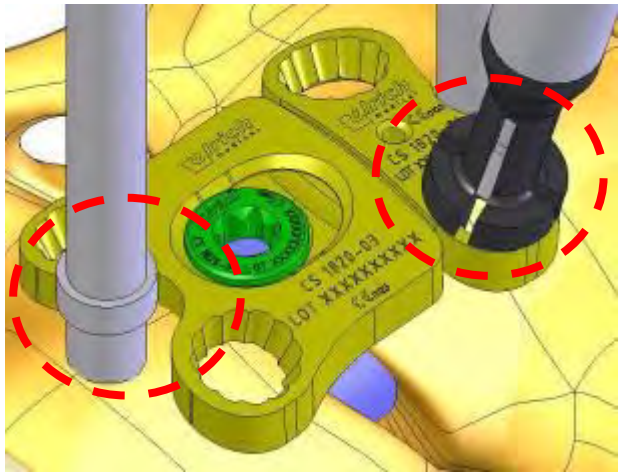

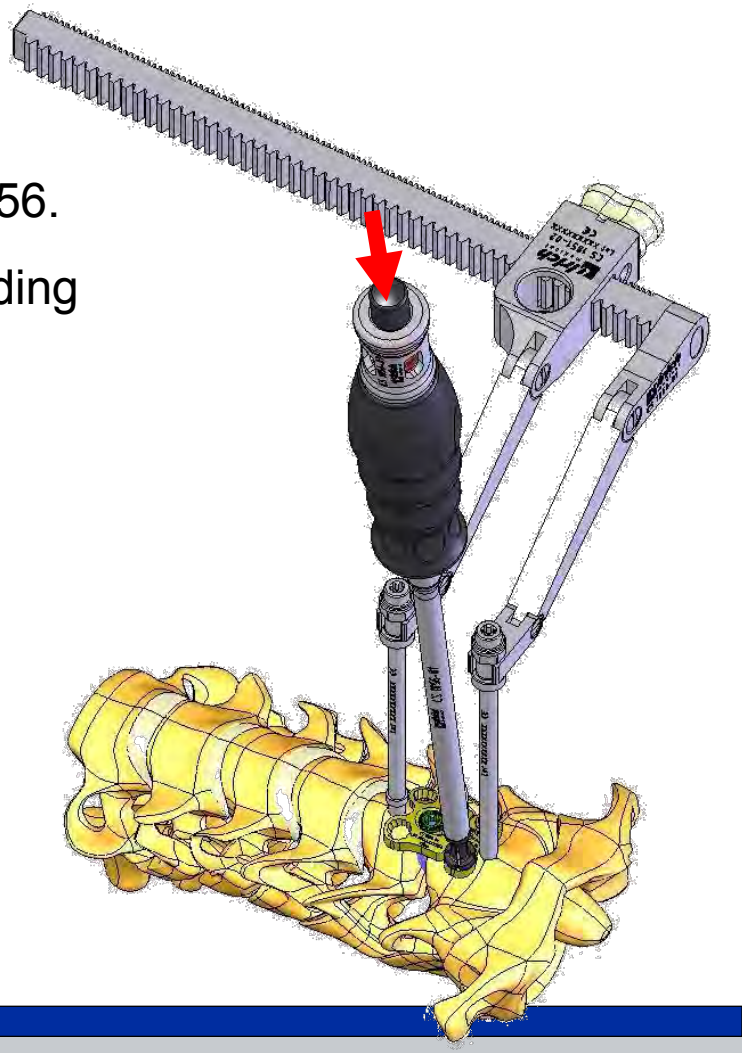

mambo Surgical Technique

Temporary plate fixation

Prefixation by inserting temporary fixation pin CS 1858 using the pininserter instrument CS 1857.

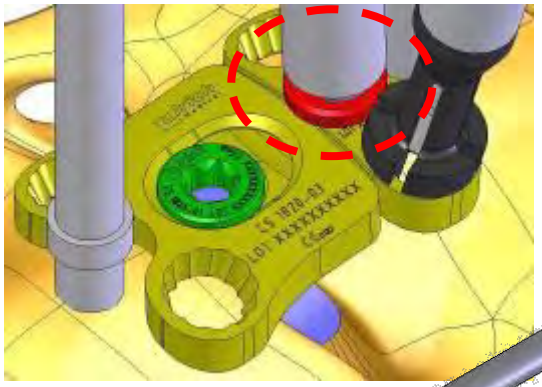

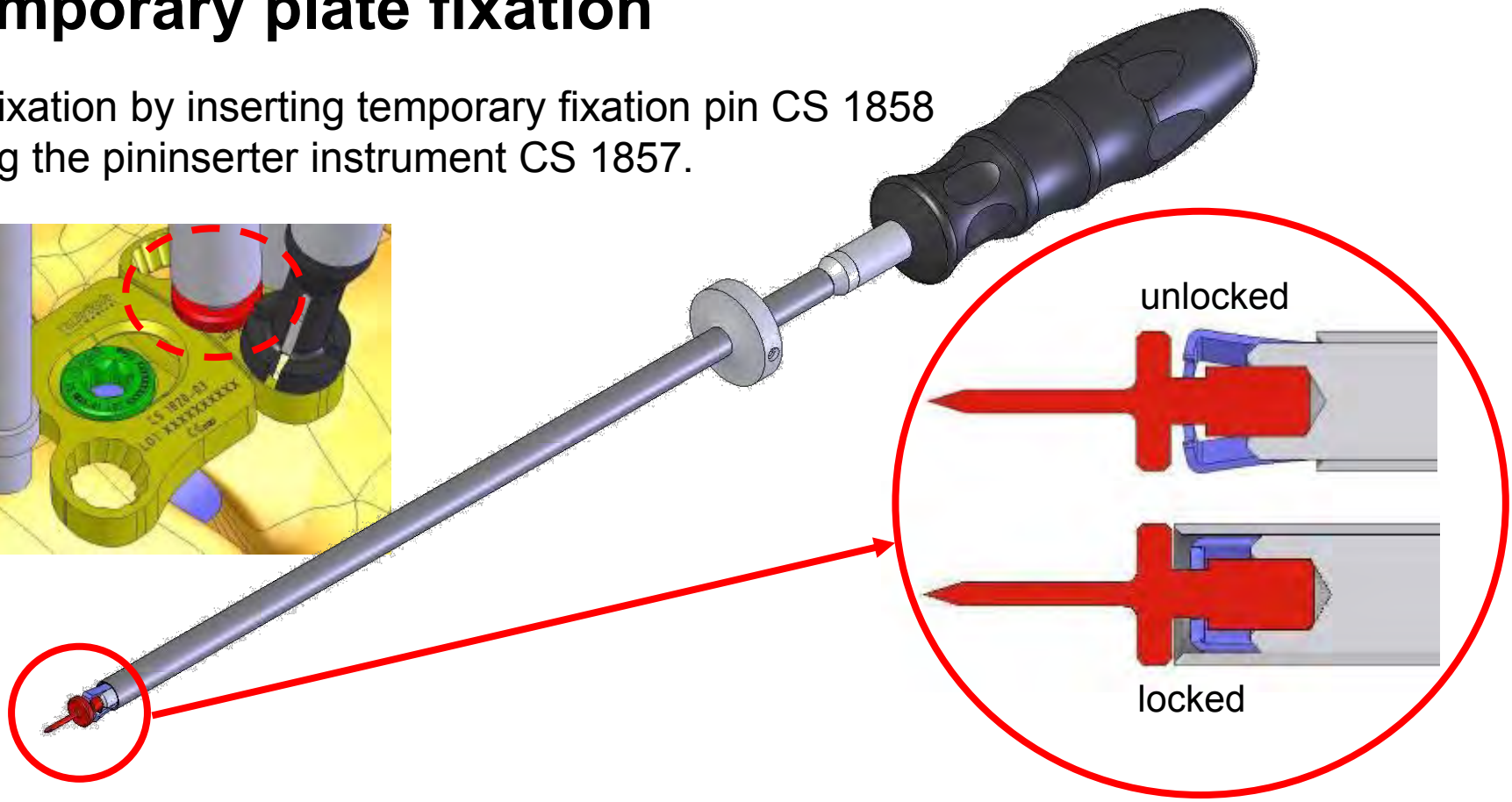

mambo Surgical Technique

Preparing for screw insertion

Using the single drill jig CS 1862 or
the double drill jig CS 1861.

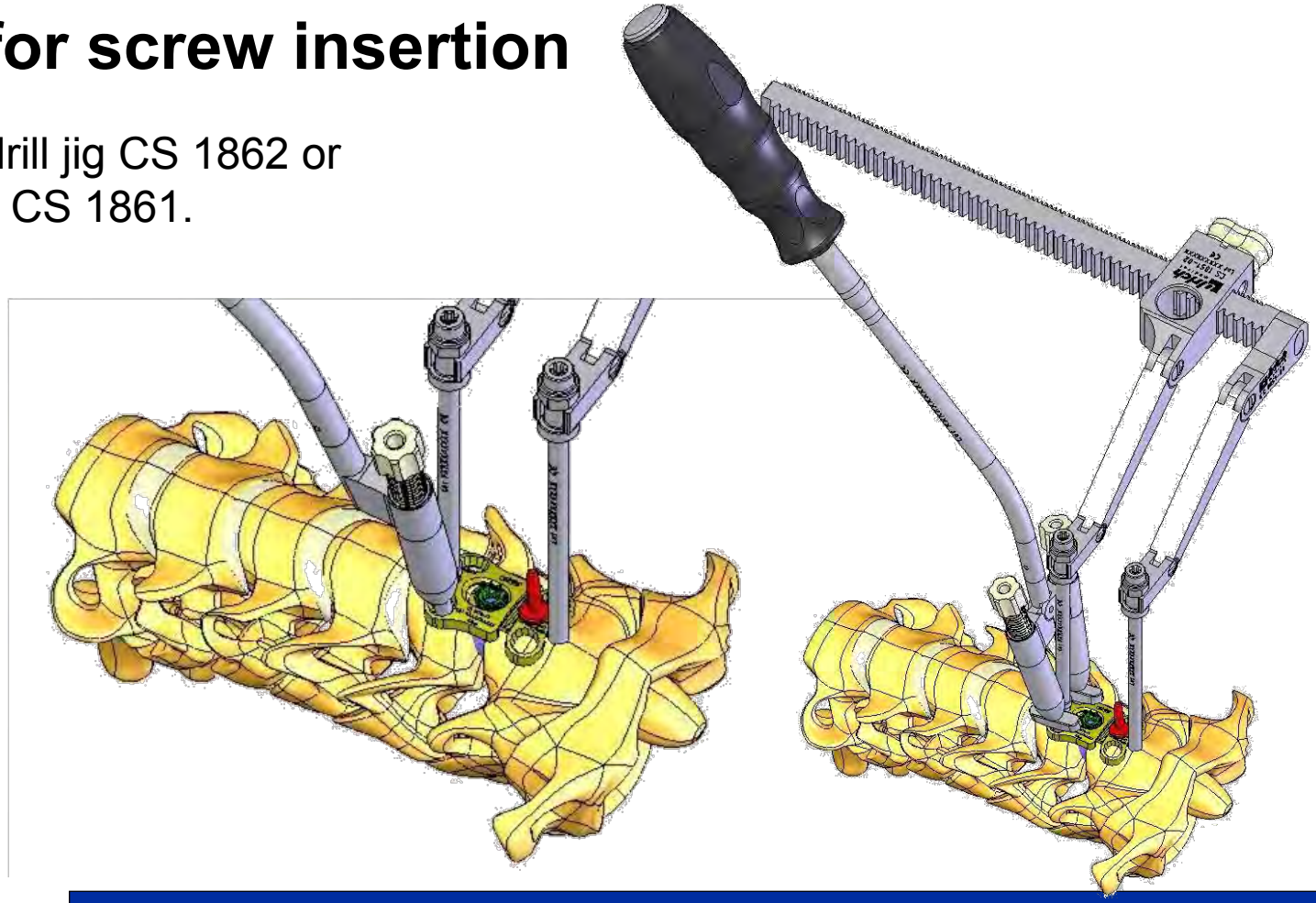

mambo Surgical Technique

Implantation of screws

Implanting bone screws or rescue screws by using the screwdriver torx 15.

After implanting caudal screws if necessary compression can be carried out by the reposition tool.

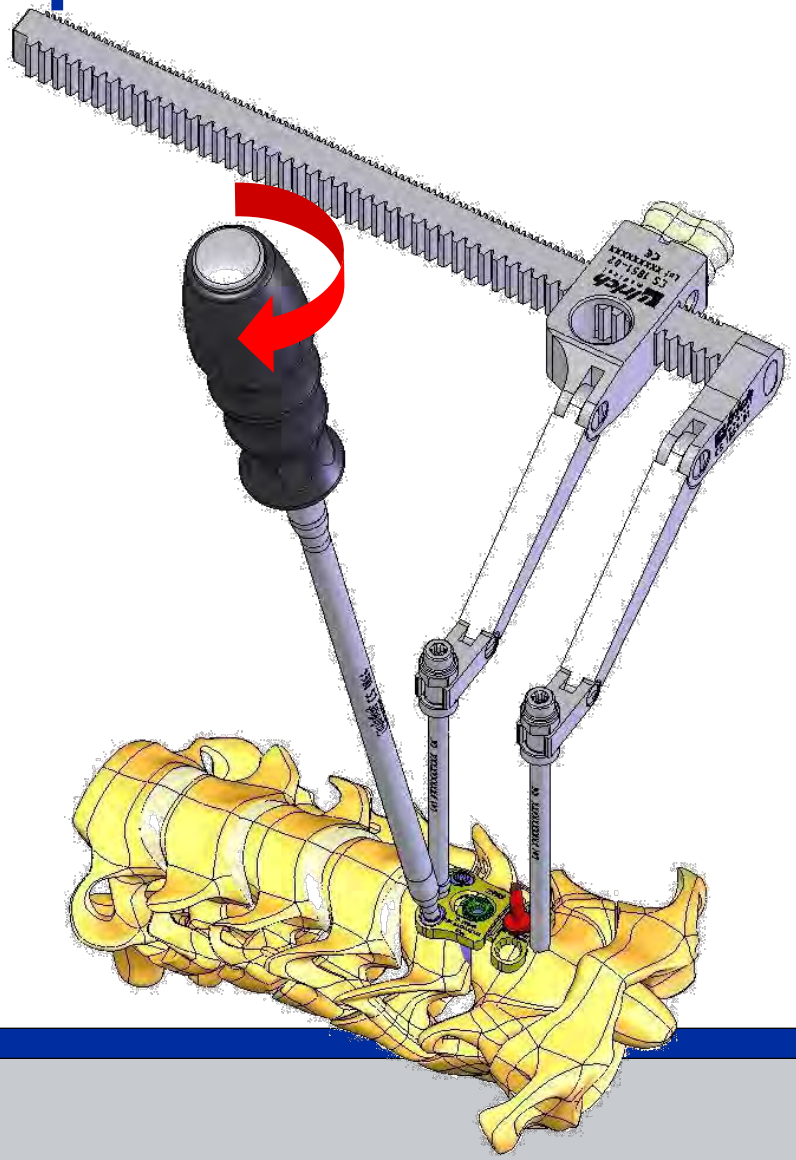

mambo Surgical Technique

Removing of temporary fixation pin

Using the pininserter instrument.

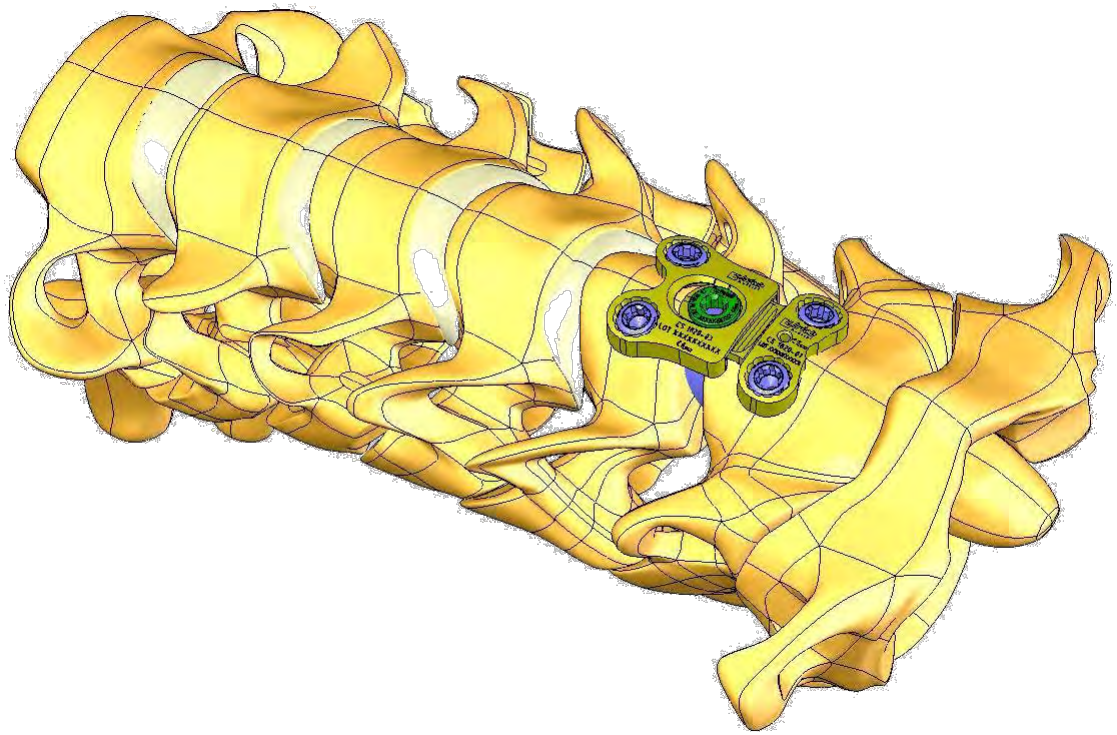

mambo Tray

CS 1881-01 Tray lid

CS 1881-03 Layer for bone & rescue screws

CS 1881-04 Storage disc for settling & clamping screws

CS 1881-02 Layer implants & measurement (TOP)

CS 1881-05 Layer implantation (MIDDLE)

CS 1881-06 Layer preparation & manipulation (BOTTOM)

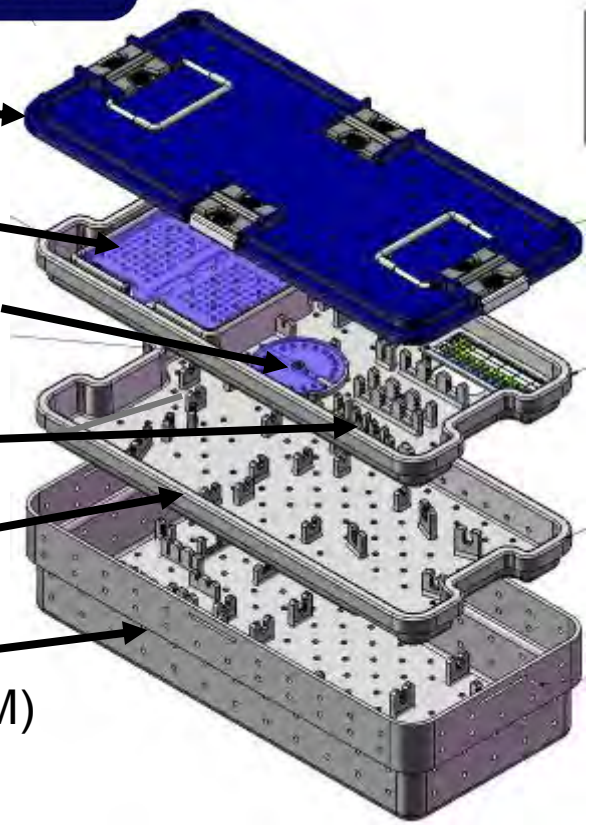

mambo

Summary & Advantages

- Cervical plate system for anterior stabilization
- Possibility of dynamic and constrained instrumentation
- Modular design for individual plate lengths
- Gliding plate components allow optimal screw placement
- One-step locking mechanism and back-out protection
- Pre-contoured and –assembled plates
- Color-coded implants
- Clearly arranged set

Thank You